TRANSMISSION NEWS

Ericsson LM

No 1 • Vol. 2 • September 1978

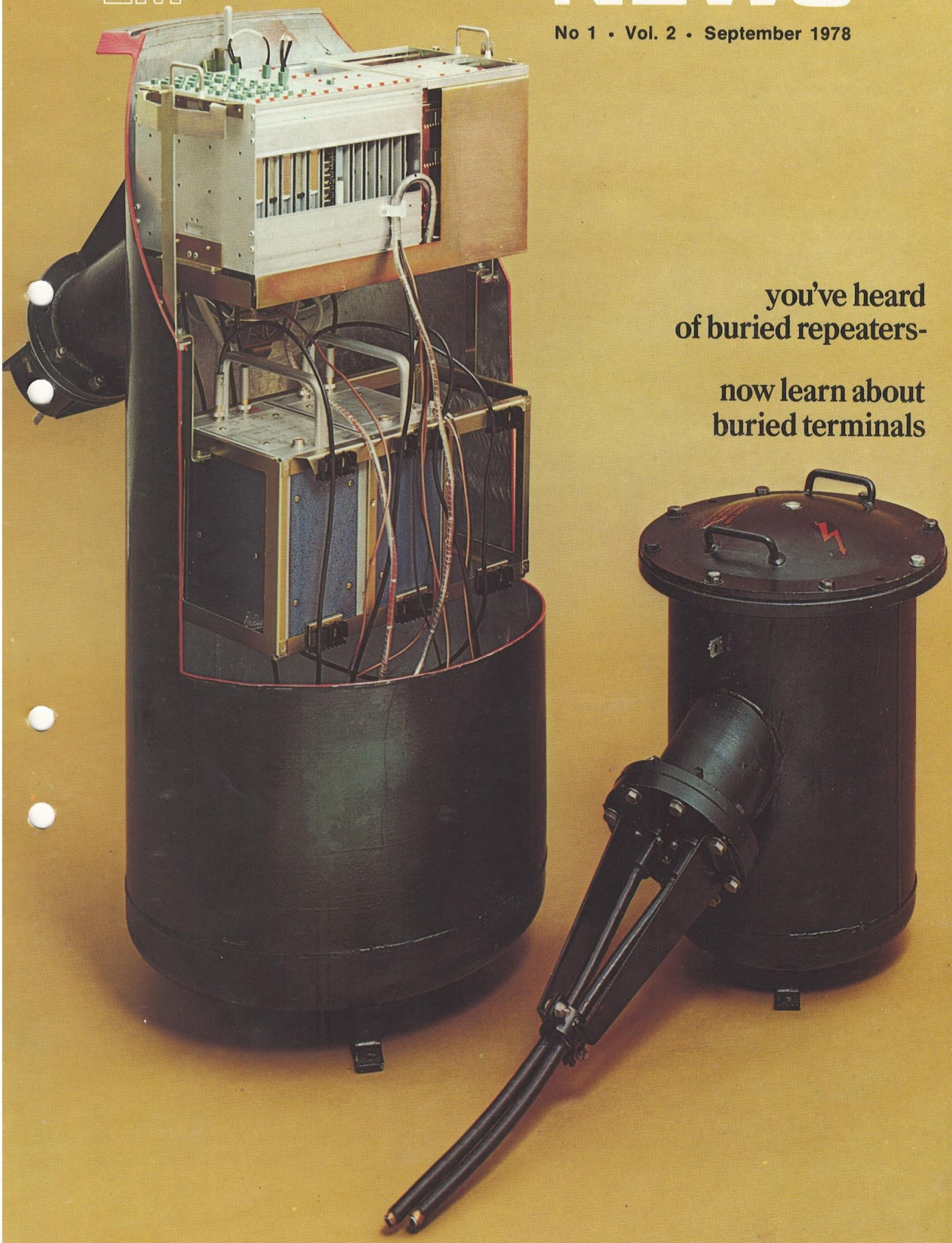

you've heard of buried repeaters-

now learn about buried terminals

M5 goes underground

Coaxial line repeaters have been buried ever since the introduction of the first transistorized systems in 1965.

The exceptional compactness and the low power consumption of the M5 multiplex now makes it possible to bury also some of the terminals.

Coaxial line systems are sometimes used in applications where it is desirable to drop VF circuits at repeater points. Typical examples are pipelines and railways where a small number of circuits is often needed at points where no station buildings are available.

For the 2-W FDM systems ZAX 120T and ZAX 480T, Ericsson has developed a fully self-contained multiplex terminal which may be mounted in a buried container.

The terminal includes branching equipment and permits up to 12 VF circuits to be dropped and terminated at any point along the line.

Especially interesting is the fact that the equipment is powered from the line current and requires no local power supply.

Furthermore all carriers needed are obtained by regeneration and conversion of the line pilot so that no master oscillator is needed.

The terminal can be equipped for either single or double leak branching and as it is intended to operate only in SG2 no supergroup modulation is required.

On the other hand all five group modems are included so that any of the groups 1-5 may be selected simply by moving two plugs.

Even telephone sets may be connected

Space is provided for up to three signalling converters for subscriber line signalling. This enables telephone sets to be connected directly to the container. Alternatively, other types of signalling converters may be included.

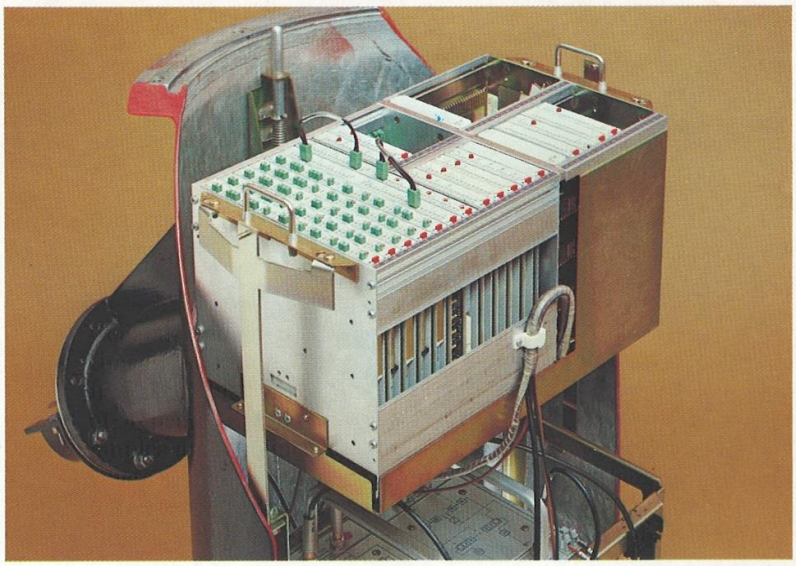

Fig. 1. Close-up of the Multiplex Shelf

Design background

The development of this equipment was made possible thanks to a series of factors, such as the exceptionally compact construction of the M5 multiplex. This enables a 12-channel package with only slight mechanical modifications to be mounted in a standard repeater container.

The container used is of the type designed for ZAX 960 and ZAX 2700. A trust-worthy design based on nearly 15 years experience and known to provide environmental conditions which are in some ways better than those prevailing in many station buildings:

- **Stable temperature**
- **Low and constant humidity**
- **No dust**
- **No unauthorized personnel.**

The low power consumption of the M5 equipment is a further advantage which enables the buried terminal to be power fed from the line current. The voltage drop is in the region of 100–200 V.

Naturally equipment mounted in buried containers has to be extremely reliable and completely free from routine maintenance, pre-requisites easily fulfilled by the M5 multiplex.

Equipment description

The equipment needed, apart from the line repeaters, is built up of two major blocks. The Power Unit with branching equipment and the Multiplex Shelf. See block diagram fig. 3 and photo fig. 2.

The Power Unit contains power separation filters and a DC/DC converter which converts the line current to a stabilized 12 V supply. The Power Unit also houses the branching hybrids which may be strapped for either single or double branching.

The Multiplex Shelf houses the channel and group translating equipment with its associated carrier generating equipment as well as the line terminating equipment and the signalling converters.

Each channel modem unit holds a complete subgroup i.e. channel translation and signalling for three circuits in addition to subgroup translation.

The outband signalling can be strapped for either high or low level.

The group modem unit includes five group modulators and demodulators on a single card. Se-

Selection of any of the groups 1-5 can be made by plugs on the front of the unit. See block diagram fig. 5 and photo fig. 7.

All the carriers needed for the translating and modulating stages are obtained by regeneration and conversion of the line pilot. The regenerator is a phase locked loop circuit which regenerates the line pilot for use as carrier for the line group modulator and demodulator. The regenerator also includes a frequency divider which converts the line pilot frequency into 124 kHz.

From the 124 kHz basic frequency all the necessary carriers and signalling frequencies are derived as shown in the block diagram fig. 6.

(Cover photo:)

Cut-away view of buried multiplex terminal shown beside a repeater station for 2-wire FDM systems.

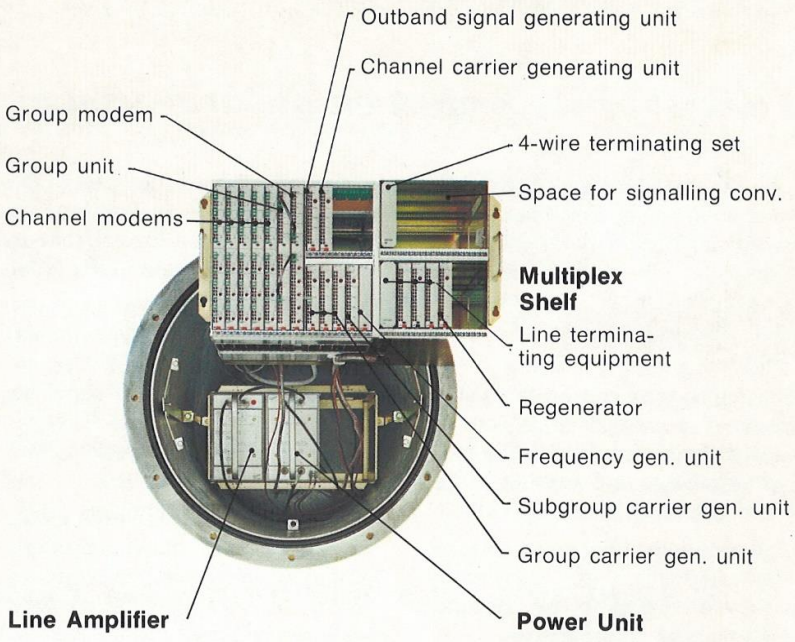

Fig. 2. The Multiplex Shelf can easily be lifted up to gain access to the Line Amplifier and the Power Unit mounted below.

It should be noted that the photos fig's 1 and 2 show the terminal equipped for single branching.

Single branching is arranged by omitting the line amplifier on the right hand side and the HS (High Send) line terminating equipment.

The corresponding branching hybrid can be bypassed by means of straps.

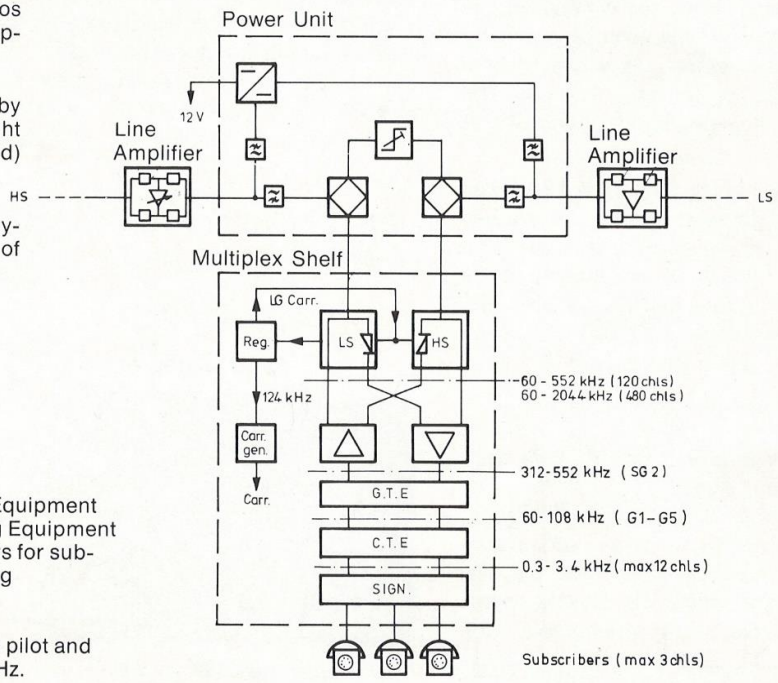

G.T.E. = Group Translating Equipment
C.T.E. = Channel Translating Equipment
SIGN. = Signalling converters for subscriber line signalling
LG Carr. = Line Group Carrier
Carr. gen. = Carrier generation
Reg. = Regeneration of line pilot and conversion to 124 kHz.

Fig. 3. Block diagram of the buried terminal shown equipped for double branching.

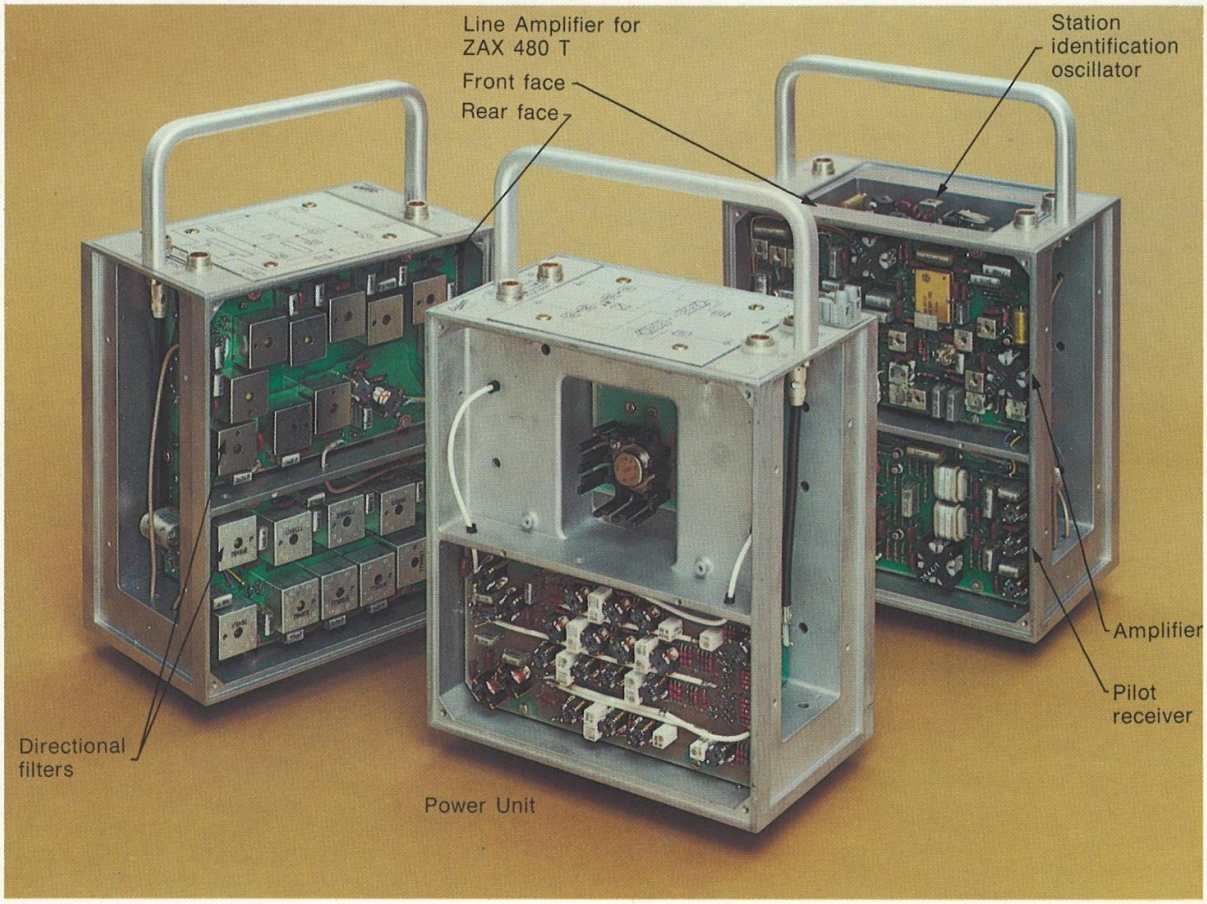

Fig. 4. Line Amplifier and Power Unit shown without covers.

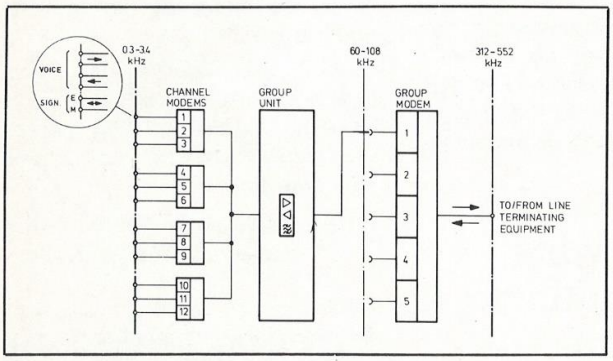

Fig. 5. Block diagram of channel and group translating equipment.

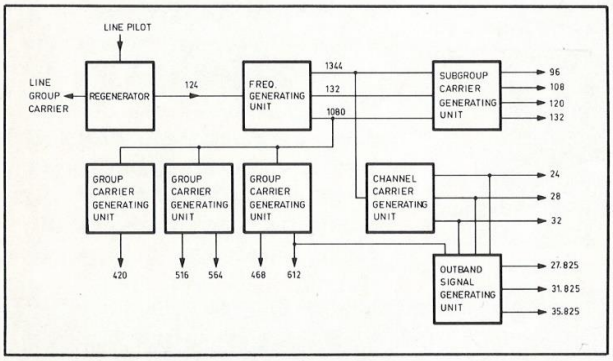

Fig. 6. Block diagram of carrier generating equipment.

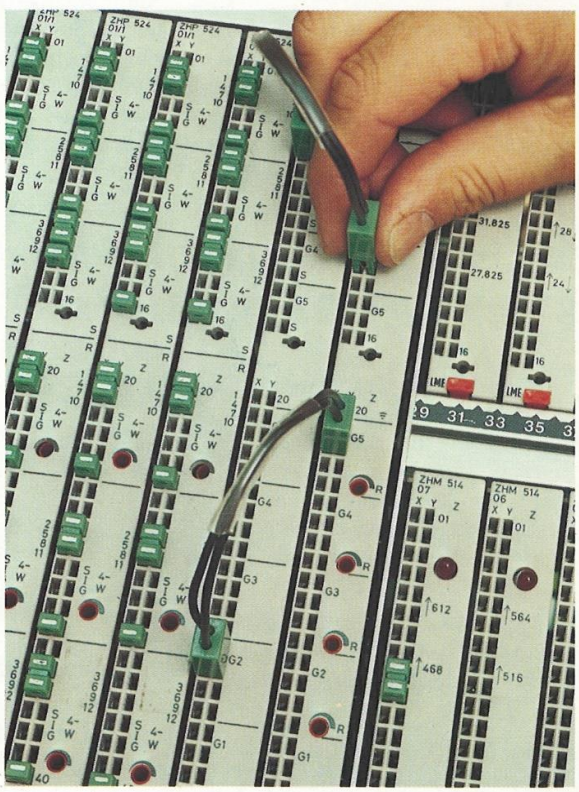

Fig. 7. Any of the groups 1-5 in SG2 may be selected by moving two plugs.

Cooperation Ericsson - UNIS in Yugoslavia

LM Ericsson and UNIS – Udružena Metalna Industrija with headquarters in Sarajevo, Yugoslavia have signed an agreement of technical and commercial cooperation.

Under the agreement UNIS will undertake manufacture, sales and installation of telephone transmission equipment of LME design.

LME will make available to UNIS its know-how and technical assistance for the manufacture in Yugoslavia of a range of products in the transmission field.

The agreement is already in effect and UNIS will start production of channel translating equipment towards the end of 1978. The manufacturing programme will then be increased step-by-step concomitant with a gradually increasing Yugoslavian content. The agreement will benefit both organizations by fortifying their positions in the Yugoslavian market.

UNIS will reinforce its competitiveness by widening its range of products as well as developing its technical capability. The cooperation with LM Ericsson also opens up improved export opportunities for UNIS.

LM Ericsson will benefit from the considerable marketing resources made available by UNIS. Alongside with the well established agent, Merkantile in Zagreb, the UNIS organization will strengthen the Ericsson representation in the Yugoslavian market.

NERA wins contract for nationwide radiolink system in Sierra Leone

The NERA Division of Elektrisk Bureau, an associate member of the Ericsson Group, has signed a contract with the government of Sierra Leone for a border-to-border radio link system.

The contract was signed on behalf of the government of Sierra Leone by Minister Kamara, Minister of Transport and Communications.

The radio link system will form part of the Panafrican Telecommunications Network and will connect Sierra Leone with the neighbouring countries Guinea and Liberia. The system is designed for a capacity of 960 telephone circuits plus television.

The associated multiplex equipment for the system will be supplied by the Transmission Division of LM Ericsson.

The contract is valued at US$4.5 million and is planned for completion in the course of 22 months.

The new telecommunications system will greatly improve both national and international communications in Sierra Leone and will be of great benefit to the general development of the country's economic life.

M5 keeps gaining ground in the USA

Back in 1972 the Transmission Division succeded in getting a strong foothold in the competitive US market. Thanks to the excellent reliability of the equipment supplied, we now receive a steady flow of orders from our major customers MCI and USTS.

During the first 6 months of 1978 the orders total US $1.5 million from MCI and US $950 000 from USTS.

MCI = MCI Communications Corporation
USTS = United States Transmission System

Ericsson wins US $4.5 million contract in Malawi

The Malawi GPO has signed a contract with LM Ericsson for the delivery of switching and transmission equipment worth US$ 4.5 million.

The transmission equipment is valued at US$400 000 and includes M5 multiplex equipment for systems up to 960 circuits and also NERA radio relay equipment and Fatme VF telegraph equipment.

GPO = General Post Office

Portugal is moving ahead

Orders for M5 multiplex worth US$1.4 million.

CTT in Lisbon, Portugal has signed a contract with Ericsson for M5 multiplex equipment worth US$1.4 million.

The equipment is intended for expansion of the regional network in Portugal. Delivery of the equipment will take place during 1978 and 1979.

Under the contract Ericsson will also initiate manufacture of multiplex equipment in Portugal in cooperation with the Portuguese company Centrel.

CTT = Correios e Telecomunicações de Portugal.

Pipeline project in Yugoslavia

The first order for the buried multiplex terminals described in the article "M5 goes underground" has been received from Yugoslavia.

The order comprises a ZAX 120 T system with more than 40 buried terminals to be used for communications and transmission of alarm signals etc for a pipeline system. The route which runs almost from border to border in Yugoslavia is about 800 km in length.

Cairo - Asswan nearing completion

Coaxial cable project on historic ground

The Pyramids of Egypt are counted among the world's most well-known historic monuments, and places like Luxor and Asswan are household names to everyone with even the slightest interest in history.

On this historic ground the installation of a coaxial cable was recently completed. The cable runs between Cairo and Asswan, a distance of no less than 1000 km.

The people working on the project celebrated this happy occasion by a feast according to the Egyptian customs and traditions.

The Egyptian administration ARETO expects to take the system into operational service in the very near future.

Egypt has a very hot and dry climate and 87 % of its area is covered by desert. Through this barren desert runs the Nile as a life-giving artery bringing water and fertilizing sediments to a narrow strip of land along its passage.

The abundant Egyptian sunshine combined with the natural irrigation and fertilization provided by the Nile makes its banks and its coastal delta into one of the world's most fertile agricultural areas.

In the 60-ies the High Dam was constructed at Asswan in order to regulate the water of the Nile. The Dam, which is the largest of its kind in the world, increases the cultivable area of Egypt by one third.

Throughout history, life in Egypt has concentrated to the banks of the Nile and apart from its agricultural significance the river has always been the life nerv of Egyptian communications and transport. Already 5000 years ago, the building materials for the pyramids were transported on the Nile.

When installing the coaxial cable system that will bring modern communications to the remote inner reaches of this ancient land, it was therefore only logical that it should follow the path of the Nile.

The route starts in Cairo, the largest city in Africa, not far from the famous pyramids at Giza. The pyramids were erected to serve as tombs for the Pharaos Cheops, Chephren and Mykerinos c:a 3000 B.C.

The cable runs southwards along the east bank of the river through ground which is frequently inaccesible to modern cable plowing machinery. Most of the excavation work has therefore been done by hand.

The route passes close to the incredible ancient temples at Karnak and Luxor. Across the river from Luxor is the Valley of the Kings with its countless tombs of Pharaohs. Especially famous is the well-preserved tomb of Tutenkamon.

Further south the route passes through Kom-Ombo and finally reaches Asswan, famous for the High Dam and the rock temple Abu Simbel of Ramses II – one of the grandest monuments in Egypt.



Checking a repeater on the Cairo – Asswan route.



Map of the Nile.

Telefonaktiebolaget LM Ericsson
TRANSMISSION DIVISION, S-126 25 STOCKHOLM, Sweden

PRINTED IN SWEDEN SATHERLUND & KROOK